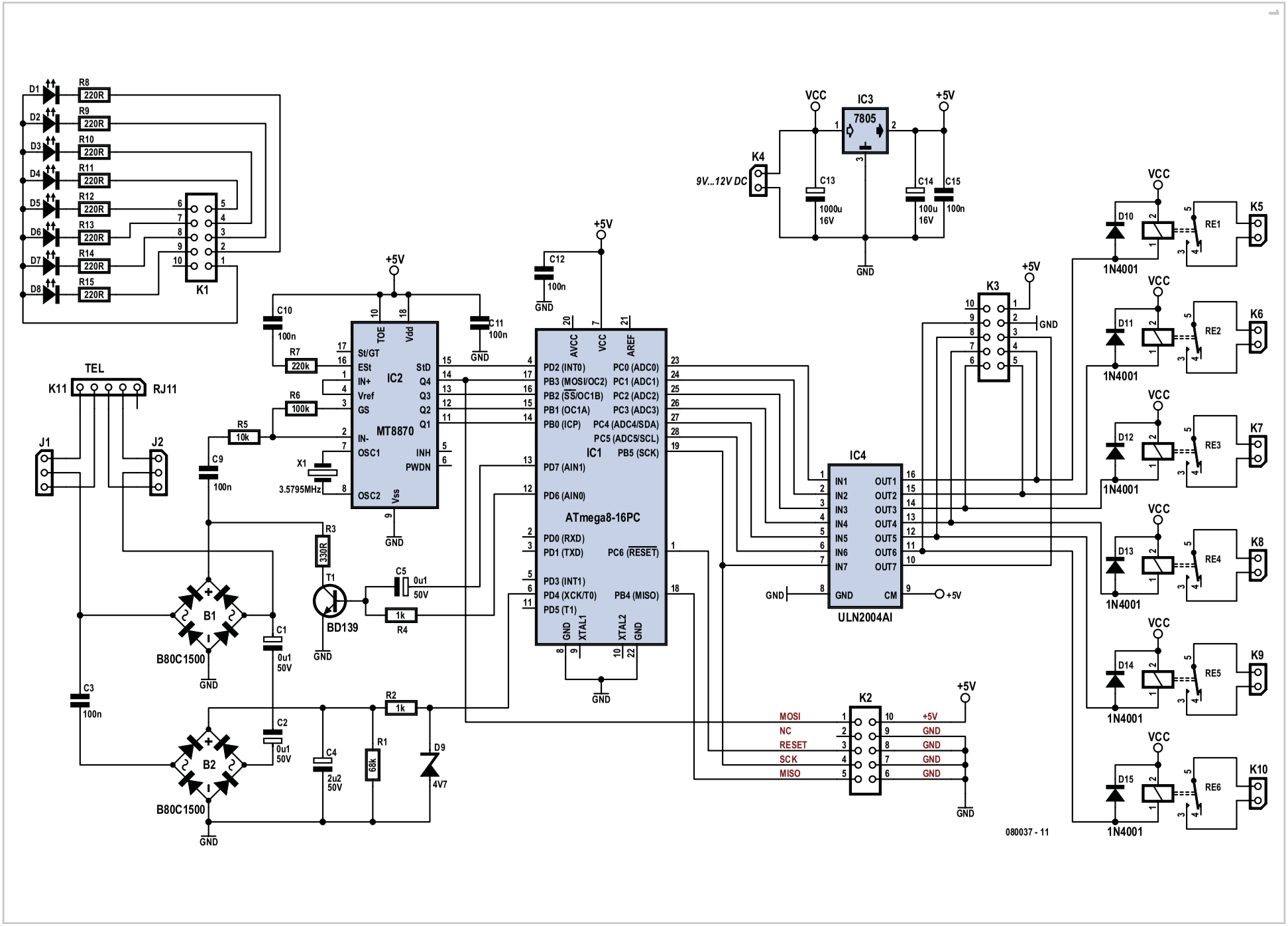
D1
D2
D3
D4
D5
D6
D7
D8
R8
R9
R10
R11
R12
R13
R14
R15
220R
K1
TEL
K11
RJ11
J1
J2
C10
100n
R7
220k
R6
100k
R5
10k
C9
100n
X1
3.5795MHz
IC2
MT8870
TOE
Vdd
St/GT
ESt
IN+
Vref
GS
IN-
OSC1
OSC2
Vss
StD
Q4
Q3
Q2
Q1
INH
PWDN
C11
100n
GND
+5V
R3
330R
T1
BD139
C5
0u1
50V
R4
1k
B1
B80C1500
C1
0u1
50V
C3
100n
C2
0u1
50V
B2
B80C1500
C4
2u2
50V
R1
68k
R2
1k
D9
4V7
C12
100n
IC1
ATmega8-16PC
AVCC
VCC
AREF
PD2 (INT0)
PB3 (MOSI/OC2)
PB2 (SS/OC1B)
PB1 (OC1A)
PB0 (ICP)
PD7 (AIN1)
PD6 (AIN0)
PD0 (RXD)
PD1 (TXD)
PD3 (INT1)
PD4 (XCK/T0)
PD5 (T1)
PC0 (ADC0)
PC1 (ADC1)
PC2 (ADC2)
PC3 (ADC3)
PC4 (ADC4/SDA)
PC5 (ADC5/SCL)
PB5 (SCK)
PC6 (RESET)
PB4 (MISO)
XTAL1
XTAL2
VCC
IC3
7805
K4
9V...12V DC
C13
1000u
16V
C14
100u
16V
C15
100n
K3
IC4
ULN2004AI
IN1
IN2
IN3
IN4
IN5
IN6
IN7
GND
OUT1
OUT2
OUT3
OUT4
OUT5
OUT6
OUT7
CM
K2
MOSI
NC
RESET
SCK
MISO
D10
D11
D12
D13
D14
D15
1N4001
RE1
RE2
RE3
RE4
RE5
RE6
K5
K6
K7
K8
K9
K10
080037 - 11